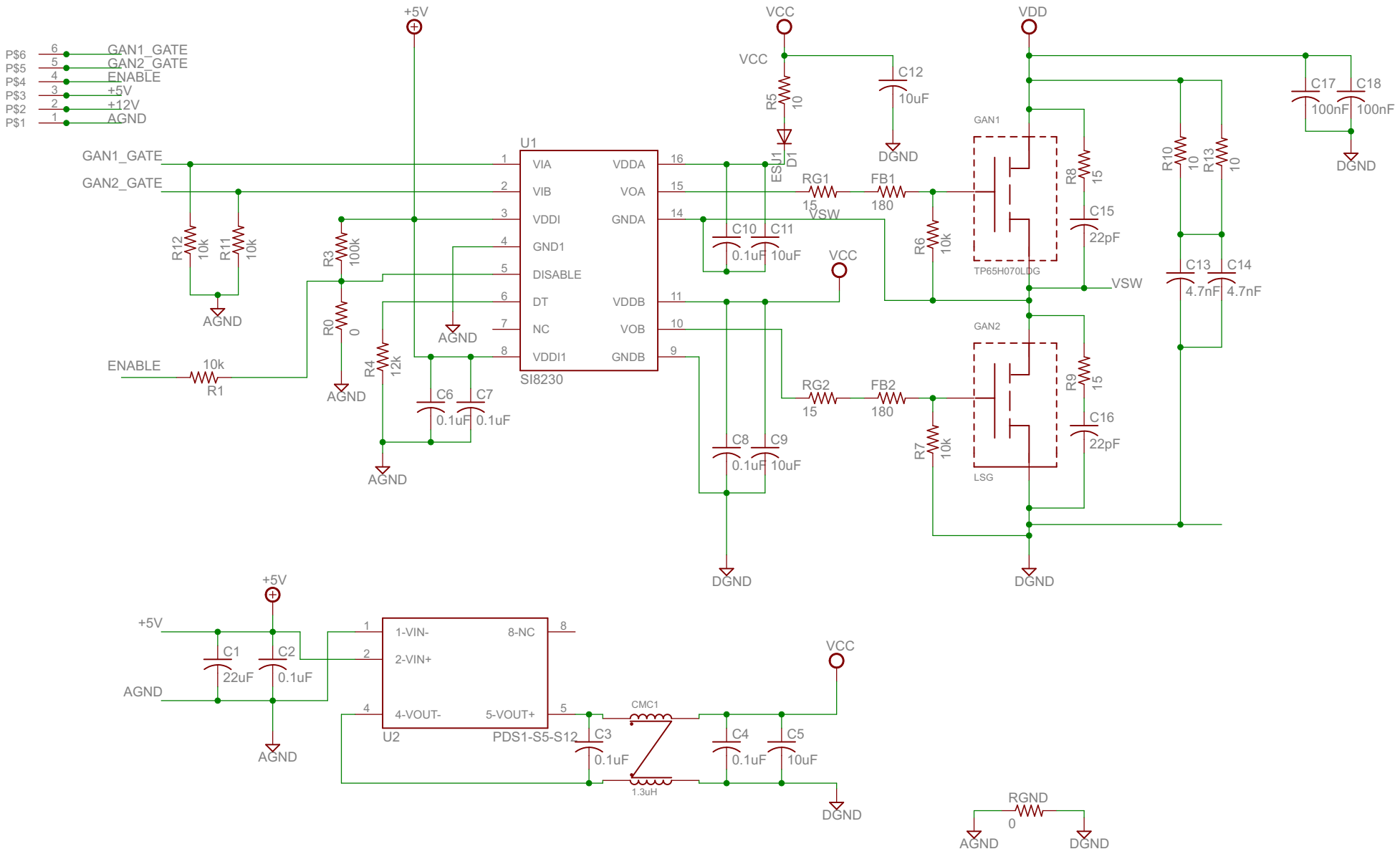

4/2/2019 3:57:33 PM C:\Eagle_TransphormProjects\eval_TDHB-65H070L\TDHB-65H070L-DC_0v1\TDBH-65H070L-DC_0v1.sch (Sheet: 1/1)