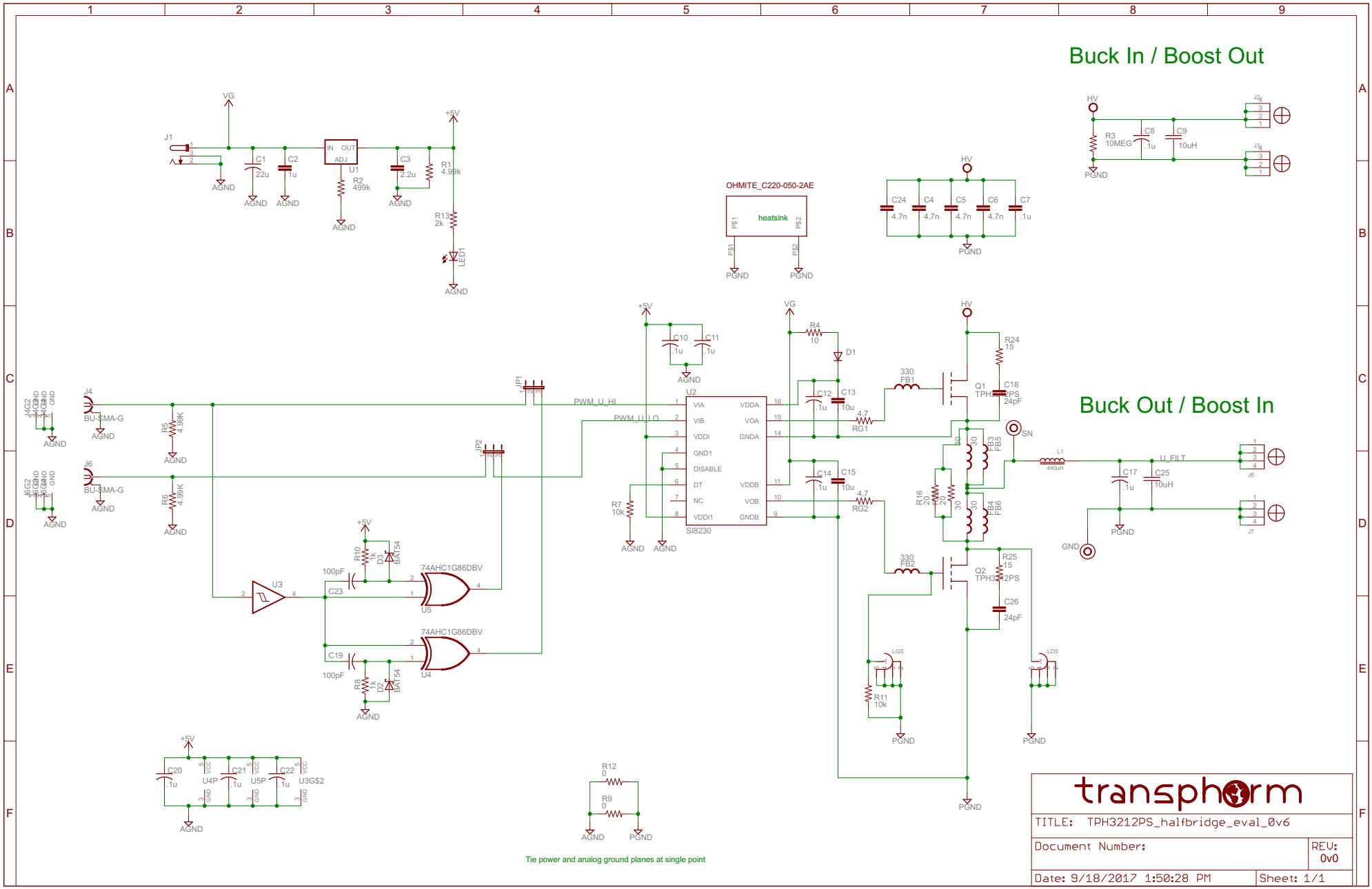

12/6/2017 1:30:16 PM f=0.61 C:\Eagle_TransphormProjects\eval_TDHBG2500P100___TPH3212PS\0v6\TPH3212PS_halfbridge_eval_0v6.sch (Sheet: 1/1)